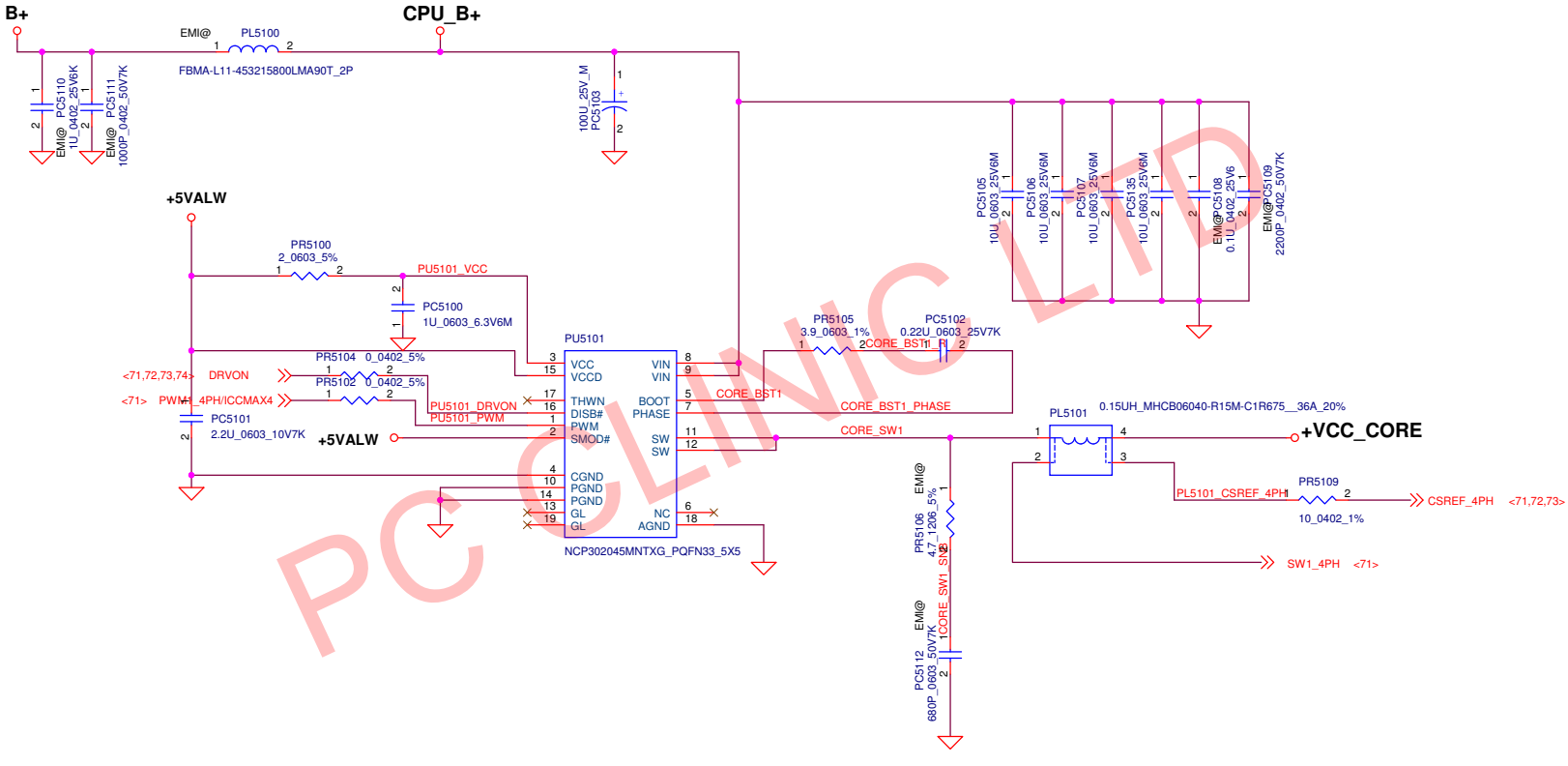
B+
CPU_B+
EMI@ PL5100
FBMA-L11-453215800LMA90T_2P
EMI@ PC5110 1U_0402_25V6K
EMI@ PC5111 1000P_0402_50V7K
100U_25V_M PC5103
+5VALW
PR5100 2_0603_5%
PU5101_VCC
PC5100 1U_0603_6.3V6M
PU5101
VCC
VCCD
THWN
DISB#
PWM
SMOD#
CGND
PGND
PGND
GL
GL
VIN
VIN
BOOT
PHASE
SW
SW
NC
AGND
NCP302045MNTXG_PQFN33_5X5
PR5104 0_0402_5%
PR5102 0_0402_5%
<71,72,73,74> DRVON
<71> PWM_4PH/ICCMAX4
PU5101_DRVON
PU5101_PWM
PC5101 2.2U_0603_10V7K
+5VALW
PR5105 3.9_0603_1%
CORE_BST1_R
PC5102 0.22U_0603_25V7K
CORE_BST1
CORE_BST1_PHASE
CORE_SW1
PC5105 10U_0603_25V6M
PC5106 10U_0603_25V6M
PC5107 10U_0603_25V6M
PC5135 10U_0603_25V6M
EMI@PC5108 0.1U_0402_25V6
EMI@PC5109 2200P_0402_50V7K
PL5101 0.15UH_MHCB06040-R15M-C1R675__36A_20%
+VCC_CORE
PL5101_CSREF_4PH
PR5109 10_0402_1%
CSREF_4PH <71,72,73>
SW1_4PH <71>
EMI@ PR5106 4.7_1206_5%
CORE_SW1
EMI@ PC5112 680P_0603_50V7K
PC CLINIC LTD