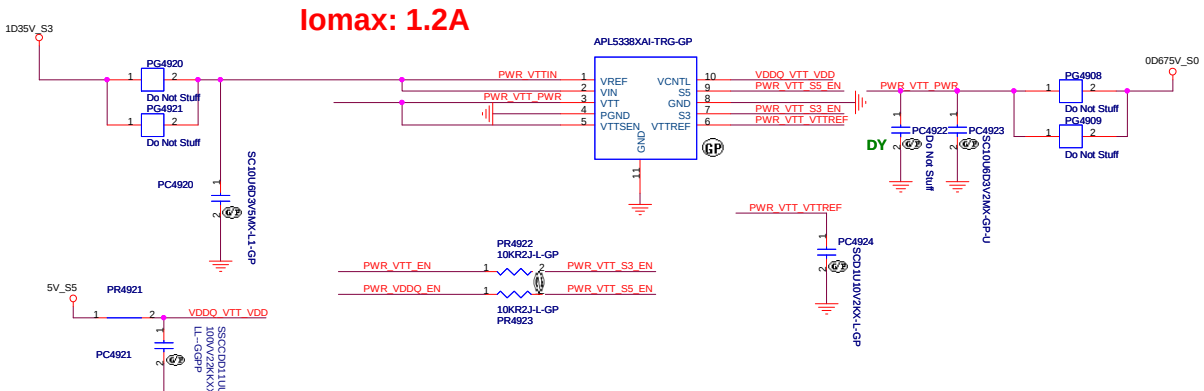
+0.675VS
Iomax: 1.2A
1D35V_S3
PG4920
Do Not Stuff
PG4921
Do Not Stuff
PC4920
SC10U6D3V5MX-L1-GP
APL5338XAI-TRG-GP
VREF
VIN
VTT
PGND
VTTSEN
GND
VCNTL
S5
GND
S3
VTTREF
PWR_VTTIN
PWR_VTT_PWR
VDDQ_VTT_VDD
PWR_VTT_S5_EN
PWR_VTT_S3_EN
PWR_VTT_VTTREF
PWR_VTT_PWR
PC4922
PC4923
DY
Do Not Stuff
SC10U6D3V2MX-GP-U
PG4908
Do Not Stuff
PG4909
Do Not Stuff
0D675V_S0
PWR_VTT_VTTREF
PC4924
SC01U10V2KX-L-GP
PR4922
10KR2J-L-GP
PWR_VTT_EN
PWR_VTT_S3_EN
PWR_VDDQ_EN
PWR_VTT_S5_EN
10KR2J-L-GP
PR4923
5V_S5
PR4921
VDDQ_VTT_VDD
PC4921
SSCCD11U1
100V22KXX-
LL-GGPP